Spare Part Book

D600

GEO _ macchine _ agricole

Table of Contents

Tavola	Page
D600_parte 1	3
D600_parte 2	5
MOTORE 168F	9

GEO_macchine_agricole

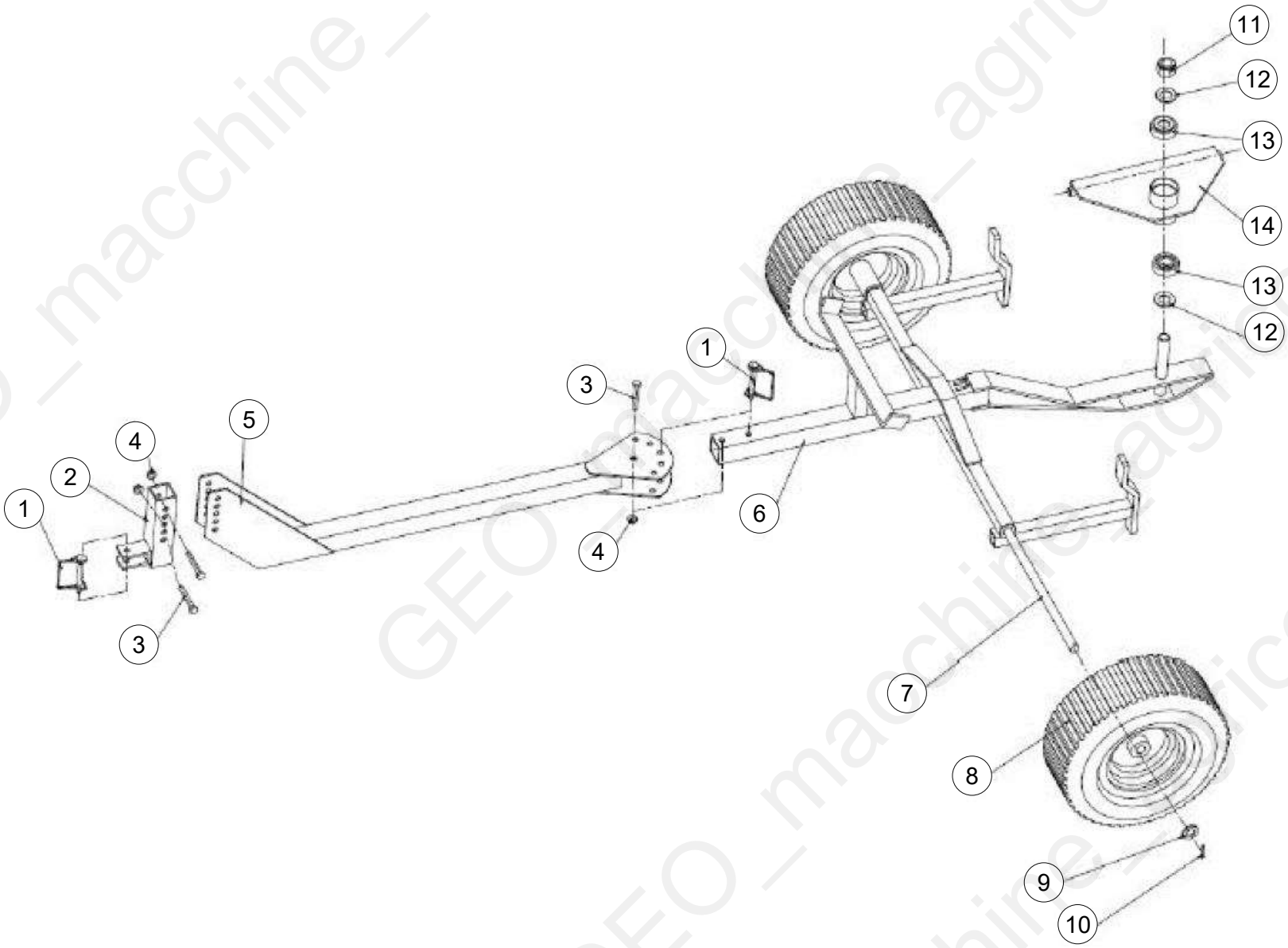
11
12
13
14
13
12
1
3
5
4
2
1
6
4
3
7
8
9
10

Machine: D600

Assembly: D600_parte 1

Pos	Code	Description	NOTE	Q.
1	PST5.030	Hitch pin		2
2	PST5.011	L Hitch		1
3	GB5782-M8x60	Bolt M8x60		3
4	GB/T6177.1-M8	Flange Nut M8		18
5	PST5.012	Hitch		1
6	PST5.013	Frame Weldment		1
7	PST5.110	Axle		1
8	PST5.022	Tire/Wheel/Bearing		2
9	GB848-16	Plain Washer 16		6
10	GB/T91-3.2x3.2	Cotter pin 3.2X25		4
11	GB/T6128-M20	Lock Nut M20		1
12	GB848-20	Plain Washer 20		2
13	GB278-204	Bearing 60204-Z		2
14	PST5.014	Pivot Weldment		1

GEO _ macchine _ agricole

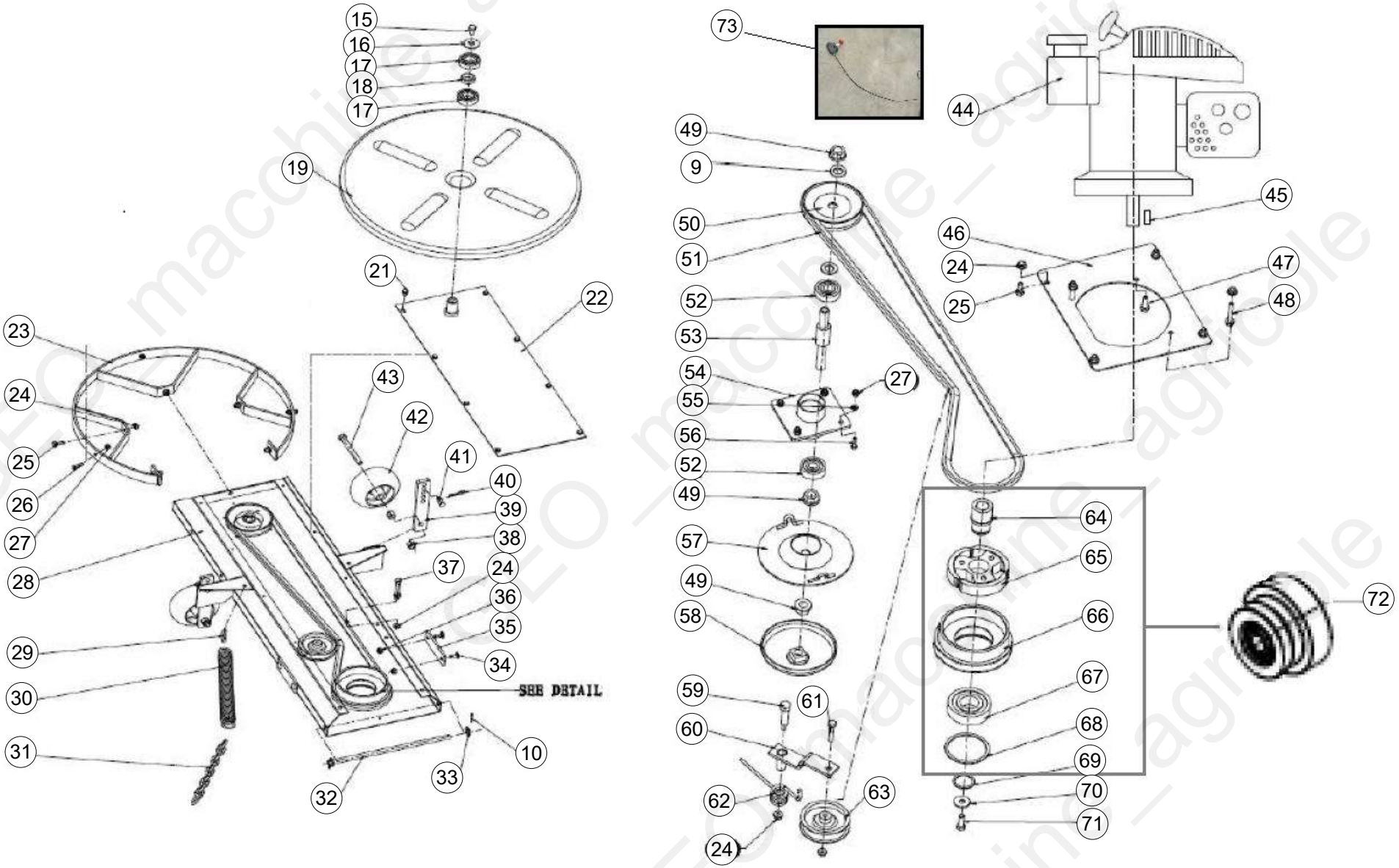
15
16
17
18
17
19
21
22
23
24
25
26
27
28
29
30
31
32
33
10
43
42
41
40
39
38
37
24
36
35
34
SEE DETAIL
73
49
9
50
51
52
53
54
55
56
52
49
57
49
58
59
60
62
24
61
63
44
45
46
24
25
47
48
27
64
65
66
67
68
69
70
71
72

Pos	Code	Description	NOTE	Q.
9	GB848-16	Plain Washer 16		1
10	GB/T91-3.2x3.2	Cotter pin 3.2X25		1
15	GB5783-M10X20	Bolt M10x20		1
16	GB96-12	Plain washer 12		1
17	GB278-6205-Z	Bearing 60205-Z		2
18	PST5.116	Spacer		1
19	PST5.125	Guard		1
21	ST6.3X14	Tapping bolt ST6.3x14		8
22	PST5.025	Belt Cover Weldment		1
23	PST5.016	Front Guard Weldment		1
24	GB/T6177.1-M8	Flange Nut M8		0
25	GB5783-M8X20	bolt M8X20		9
26	GB5783-M6X25	bolt M6X25		3
27	GB889.1-M6	Locking nut M6		3
28	PST5.015	Motor Base Weldment		1
29	PST5.111	Chain Connector		3
30	PST5.113	Return Spring		1
31	PST5.112	Safety Chain		1
32	PST5.101	Pivot Bar		1
33	GB97.1-12	plain washer 12		2
34	GB/T794-M8X20	Carriage Bolt M8x20		4
35	PST5.109	Wear Strip		2
36	GB/T6128-M8	Lock Nut M8		4
37	GB5782-M8X70	Bolt M8X70		1
38	GB6170-M12	Nut 12		2

GEO _ macchine _ agricole

Pos	Code	Description	NOTE	Q.
39	PST5.105	Height Adjust Bar		2
40	PST5.106	Hair pin 2.2		2
41	GB882-10X28	Pin 10X28		2
42	PST5.104	Roller wheel		2
43	GB5782-M12X110	Bolt M12x110		2
44	1P70FA	Engine 1P70FA		1
45	9030	Key 3/16X1.5		1
46	PST5.102	Motor Base		1
47	GB/T16674-M8X25	Bolt M8X25		1
48	GB/T16674-M8X45	Bolt M8X45		2
49	GB/T6177.1-M16	Flange Nut M16		3
50	PST5.103	Blade Pulley		1
51	GB11544-A72	Belt A72 (1829 Li)		1
52	GB278-60303-Z	Bearing 6303RS		2
53	PST5.114	Blade Shaft		1
54	PST5.018	Bearing Housing		1
55	GB97.1-6	Plain washer 6		4
56	GB5783-M6X20	bolt M6X20		4
57	PST5.020	Spinner Disk Weldment		1
58	PST5.019	Spinner Bumper		1
59	PST5.107	Shoulder Bolt		1
60	PST5.017	Idler Bracket Weldment		1
61	GB5782-M8X40	Bolt M8X40		1
62	PST5.108	Torsion Brake Spring		1
63	PST5.021	Idler Pulley		1

GEO _ macchine _ agricole

Pos	Code	Description	NOTE	Q.
64	PST5.121	Shaft		1
65	PST5.023	Centrifugal Clutch		1
66	PST5.115	Engine Pulley		1
67	GB278-307-2Z	Bearing 307-2Z		1
68	GB893.1-80	Seeger ring 80		1
69	GB894.1-35	Seeger A 35		1
70	GB96-10	Washer 10		1
71	NB238-3/8-24X1	Bolt 3/8-24X1		1
72	D600-1-12	Pulley with Centrifugal Clutch		1
73	ATV.000.012			1

GEO _ macchine _ agricole

MOTORE 168F

GEO _ macchine _ agricole

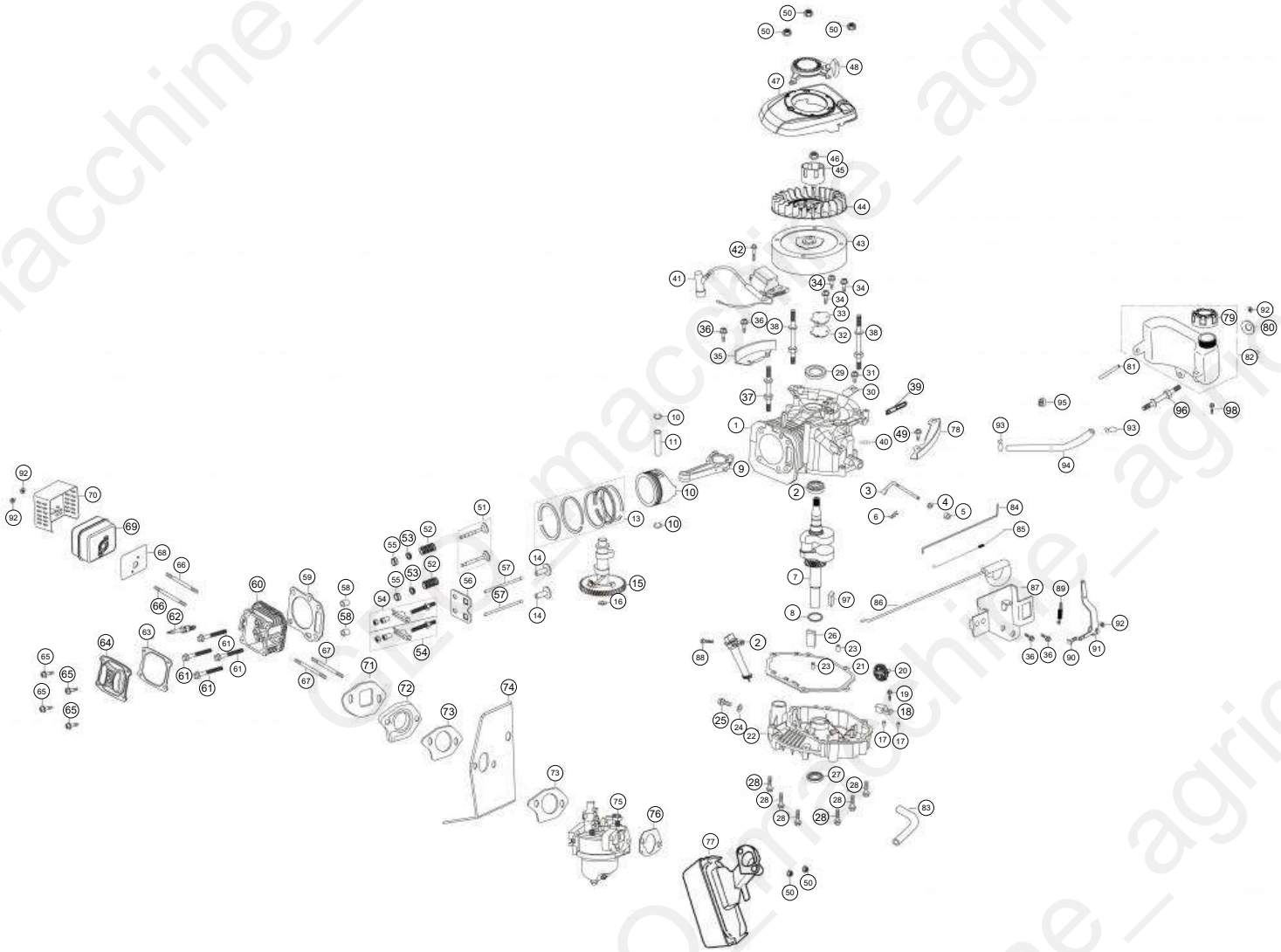

Machine: MOTORE 168F

Assembly: D600_engine

Pos	Code	Description	NOTE	Q.
1	LC1P70FAA01	CARTER MOTEUR		1
2	LC1P65FAE06	ROULEMENT 6205 Voir CLTZ1201033000		1
3	LC1P65FAC16	AXE DE REGULATEUR		1
4	LC1P65FAC17	RONDELLE		1
5	LC1P65FAC18	JOINT SPY 6X11X4 Voir CLD13040090		1
6	LC1P65FAC19	GOUPILLE BETA		1
7	LC1P70FAA07	VILEBREQUIN		1
8	LC1P65FAE08	RONDELLE		1
9	LC1P70FAA09	BIELLE		1
10	LC1P70FAA10	PISTON		1
11	LC1P70FAA11	AXE DE PISTON		1
13	LC1P70FAA13	JEU DE SEGMENTS		1
14	LC1P65FAF07	POUSSOIR DE SOUPAPE		2
15	LC1P70FAA15	ARBRE A CAME		1
16	LC1P65FAF09	RONDELLE		1
17	LC1P65FAD04	PION DE CENTRAGE D8X10		2
18	LC1P65FAD07	SUPPORT D AXE		1
19	LC1P65FAD05	BOULON M6X20		1
20	LC1P65FAD06	REGULATEUR		1
21	LC1P70FAA21	JOINT DE CARTER MOTEUR		1
22	LC1P70FAA22	CARTER MOTEUR INFERIEUR		1
23	LC1P65FAD09	PION DE CENTRAGE D8X14 Voir CLD12010290		2
24	LC1P65FAD12	RONDELLE		1
25	LC1P65FAD11	BOULON VIDANGE M10×1.25×15		1
26	LC1P65FAD10	DEFLECTEUR		1

GEO _ macchine _ agricole

Pos	Code	Description	NOTE	Q.
27	LC1P65FAD03	JOINT SPY 25X41.25X6		1
28	LC1P70FAA28	BOULON M8X50		6
29	LC1P65FAB06	JOINT SPY 25X38X7 Voir CLD13040040		1
30	LC1P65FAB07	VALVE		1
31	LC1P65FAB08	BOULON M6X10		1
32	LC1P70FAA32	JOINT		1
33	LC1P70FAA33	CAPUCHON		1
34	LC1P65FAB09	BOULON M6X14		3
35	LC1P70FAA35	PLAQUE		1
36	LC1P70FAA36	CRAMPON		1
37	LC1P65FAM06	GOUJON		1
38	LC1P65FAB05	GOUJON M6X85		2
39	LC1P65FAD13	JAUGE A HUILE Voir M1P65FA95		1
40	LC1P70FAA40	BOUCHON		1
41	LC1P70FAA41	BOBINE D ALLUMAGE		1
42	LC1P65FAC14	BOULON M6X22		1
43	LC1P70FAA43	VOLANT MAGNETIQUE		1
44	LC1P65FAI04	VENTILATEUR		1
45	LC1P65FAI05	BOL LANCEUR		1
46	LC1P65FAI06	ECROU DU VOLANT MAGNETIQUE M14X1,5		1
47	LC1P70FAA47	CARTER DE LANCEUR		1
48	LC1P70FAA48	LANCEUR Idem LC1P70FA48		1
49	LC1P65FAK06	BOULON M6X12		1
50	LC1P65FAG04	ECROU COLLERETTE M6		5
51	LC1P70FAA51	SOUPAPE (PETIT)		1

Pos	Code	Description	NOTE	Q.
52	LC1P65FAF03	RESSORT DE SOUPAPE		2
53	LC1P70FAA53	COUPELLE DE SOUPAPE		2
54	LC1P65FAF01	KIT BASCULEUR SOUPAPE		2
55	LC1P70FAA55	COQUILLE DE SOUPAPE		2
56	LC1P70FAA56	PLAQUE		1
57	LC1P70FAA57	TIGE DE POUSSOIR		2
58	LC1P65FAA10	PION DE CENTRAGE D10X14		2
59	LC1P70FAA59	JOINT DE CULASSE		1
60	LC1P70FAA60	CULASSE		1
61	LC1P70FAA61	BOULON M8X55		4
62	LC1P65FAA04	BOUGIE F7RTC Voir CLD16010070		1
63	LC1P65FAA03	JOINT DU CACHE CULBUTEURS		1
64	LC1P65FAA02	COUVERCLE DE CULBUTEURS		1
65	LC1P65FAA01	BOULON M6X16		4
66	LC1P65FAA08	GOUJON M6X91		2
67	LC1P70FAA67	GOUJON M6X113		2
68	LC1P70FAA68	JOINT D ECHAPPEMENT		1
69	LC1P70FAA69	ECHAPPEMENT		1
70	LC1P70FAA70	PROTECTION D ECHAPPEMENT		1
71	LC1P70FAA71	JOINT		1
72	LC1P70FAA72	BRIDE THERMIQUE		1
73	LC1P65FAH03	JOINT		2
74	LC1P65FAH04	JOINT ISOLANT		1
75	LC1P70FAA75	CARBURATEUR POUR LC1P70 idem LC1P70FA75		1
76	LC1P70FAA76	JOINT		1

Pos	Code	Description	NOTE	Q.
77	LC1P70FAA77	ENSEMBLE FILTRE A AIR Idem LC1P70FA77		1
78	LC1P70FAA78	PLAQUE		1
79	LC1P65FAM01	BOUCHON D ESSENCE		1
80	LC1P65FAM03	RONDELLE PLATE D6/D25		1
81	LC1P65FAM07	FILTRE A ESSENCE		1
82	LC1P65FAM04	RESERVOIR		1
83	LC1P70FAA83	TUBE		1
84	LC1P70FAA84	TIGE D ACCELERATEUR		1
85	LC1P70FAA85	RESSORT D ACCELERATEUR		1
86	LC1P70FAA86	TIGE DE STARTER		1
87	LC1P70FAA87	PLATINE D ACCELERATEUR		1
88	LC1P65FAD14	BOULON M6X35		1
89	LC1P70FAA89	RESSORT DE REGULATION		1
90	LC1P65FAK07	BOULON CARRE M6X21 Idem JL600725		1
91	LC1P70FAA91	LEVIER DE REGULATEUR Voir LC1P65FAK08		1
92	LC1P65FAK09	ECROU M6		1
93	LC1P65FAM10	COLLIER DE SERRAGE DE DURITE D10 Idem GGY94407		2
94	LC1P70FAA94	TUYAU		1
95	LC1P65FAM08	GUIDE DE DURITE		1
96	LC1P65FAB04	GOUJON M6X78.5		1
97	LC1P70FAA97	CLAVETTE		1
98	LC1P65FAJ06	BOULON M6X16		2

GEO _ macchine _ agricole